CONTENTS

Sheet 1: Basic Information
Sheet 2: Scale Guide
Sheet 3: Bill of Materials
Sheet 4: Assembly to Post
Sheet 5: In Ground Installation
Sheet 6: Surface Mount Installation
Sheet 7: Portable Mount

INSTRUMENT INFO
Scale: A Minor Pentatonic
Notes: (Left to Right) A,C,D,E,G,A,C
Bars: Coated Fiberglass
Frame: HDPE
Posts: Recycled HDPE
Mallets: Standard, 80 Durometer w/ 16" Cable Length

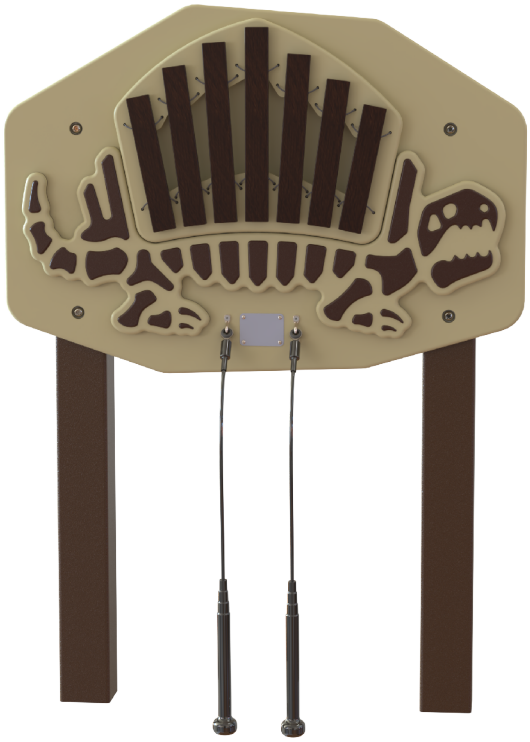

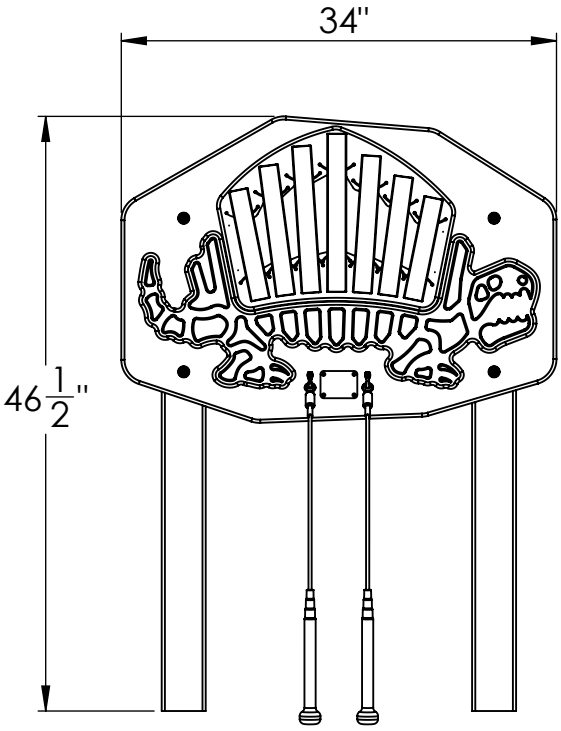

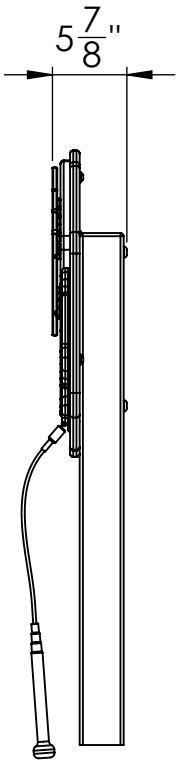

The Dimetrodon Panel is tuned to the A Minor Pentatonic Scale, a mode of the C Major Scale

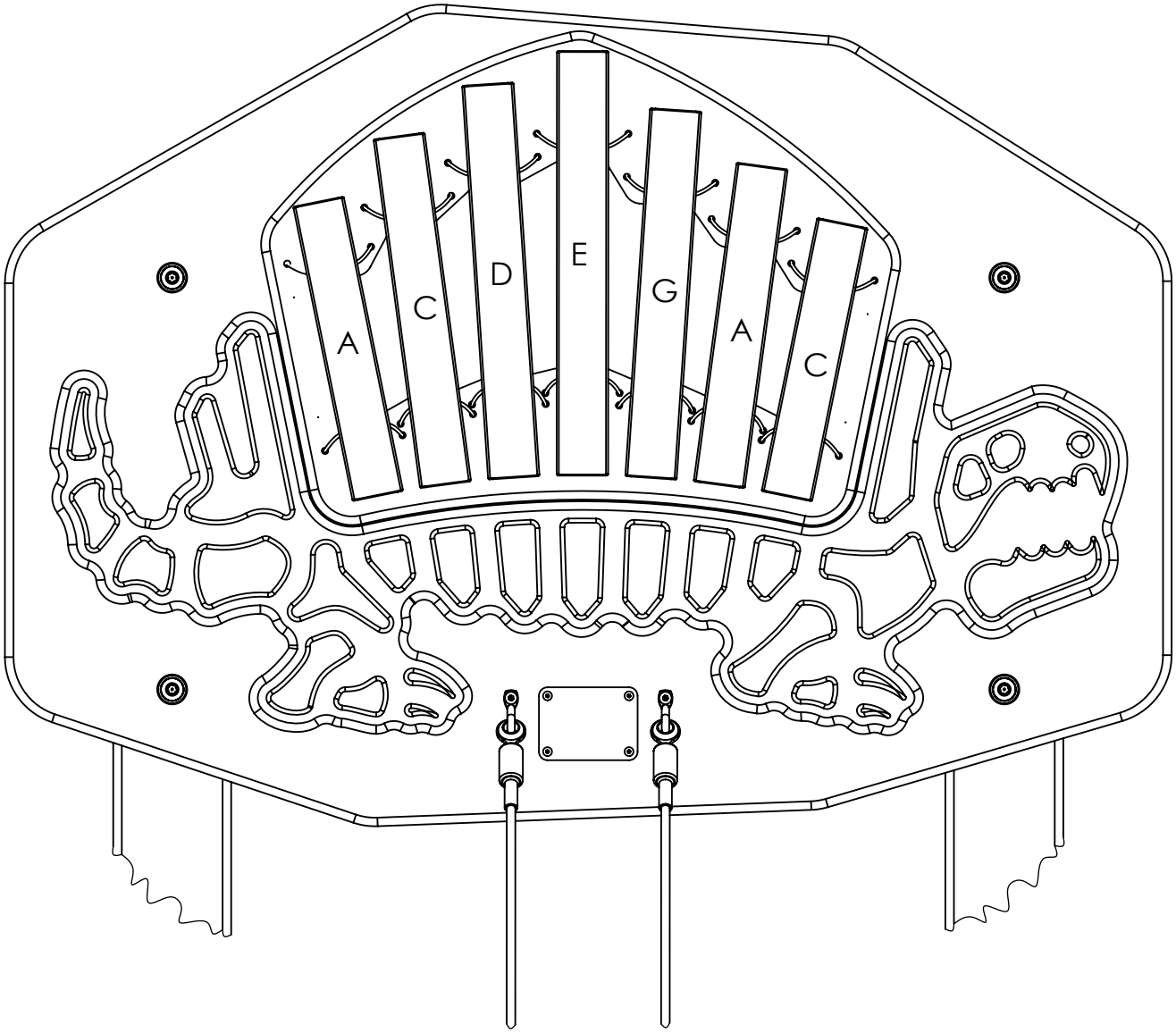

The following hardware is common to all Freestanding mounting schemes:

PART NUMBER	DESCRIPTION	QTY.
DIME-FS-BOM	Pre-Assembly Dimetrodon Instrument	1
HWN0128	3/8" -16 Barrel Nut Torx Pin 302 Stainless	4
96659A108	0.406" ID 0.812" OD 18-8 SS SAE Washer	4
HWWR0083	SS Lock Washer for 3/8" Bolts	4
HWB0249	Bolt - 3/8"-16 x 3-3/4" Security Torx With Patch	4

The following hardware is specific to each mounting scheme:

In Ground

PART NUMBER	DESCRIPTION	QTY.
POST-REC-76-VERT-12	Vertical Post, Rec. 76" lg. w/ 12" ctr-ctr Holes	2

Surface Mount

PART NUMBER	DESCRIPTION	QTY.
POST-REC-40-VERT-12	Vertical Post, Rec. 40" lg. w/ 12" ctr-ctr- Holes	2
SM-BASE-REC	Surface Mount Base HDPE, For Recycled Post	2
31N500BHLS	5/16" Hex Head Lag Bolt, 5"lg. SS	4
POW 07316	3/8"-16 Wedge Expansion Anchor, 5"lg. SS	8
9267K43	35/64" Hex Nut Cap	8

Portable Mount

PART NUMBER	DESCRIPTION	QTY.
POST-REC-40-VERT-12	Vertical Post, Rec. 40" lg. w/ 12" ctr-ctr- Holes	2
SM-BASE-REC	Surface Mount Base HDPE, For Recycled Post	2
31N500BHLS	5/16" Hex Head Lag Bolt, 5"lg. SS	4
FOSS-PM-PS-24	Fossil Portable Stand - 24" ctr-ctr	1
92105A420	3/8"-16 x 33/64" lg. Flanged Threaded Insert	8
92185A634	3/8"-16 Socket Head Screw, 2.5"lg. SS	8
94052A046	3/8" Socket Head Knob	8

Step 1: Stack each of (4) Button Head Bolts with a Split Lock Washer followed by a Flat Washer.

Step 2: Align the holes in the Instrument Assembly with the holes in each Post. Place a Barrel Nut into each hole on the backside of the Posts.

Step 3: With a T45 tamper resistant Torx bit on both sides, fasten the bolt stacks into the Barrel Nuts, passing through the front of the Instrument Panel and Posts.

The Bolts have thread locker pre-applied for a semi-permanent hold.

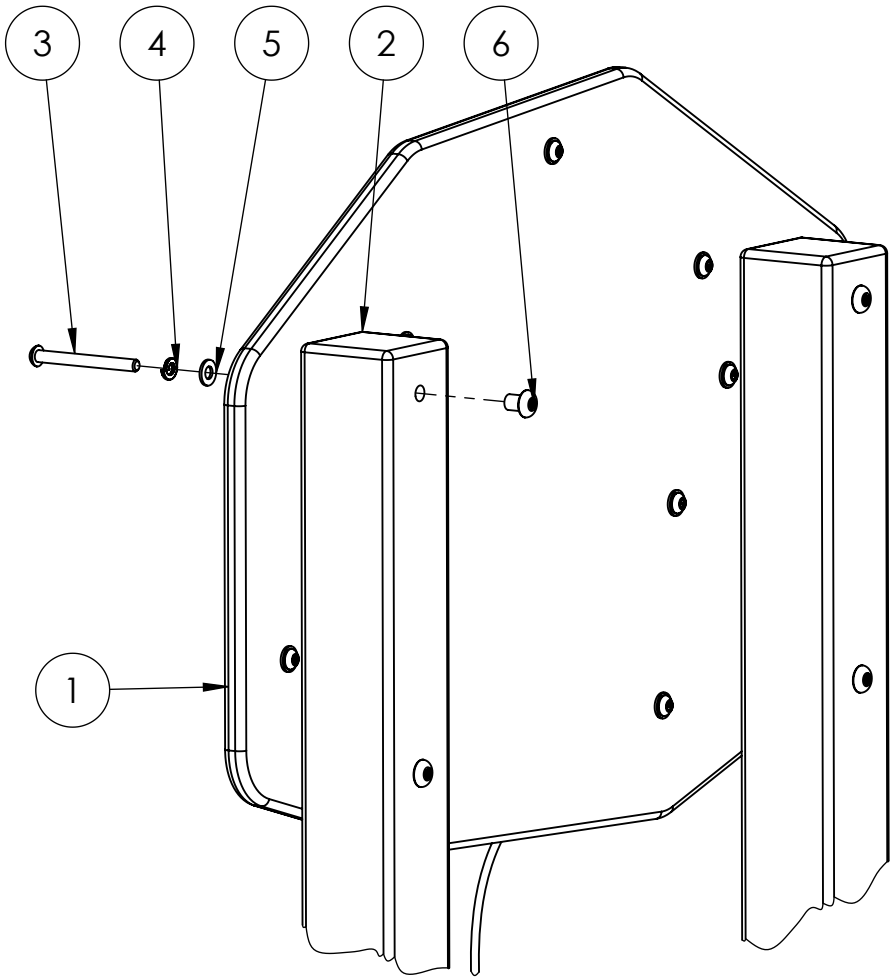

ITEM NO.	PART NUMBER	DESCRIPTION	QTY.
1	DIME-FS-BOM	Pre-Assembly Dimetrodon Instrument	1
2	POST-REC-VERT	Vertical Post, Rec. w/ 12" ctr-ctr- Holes	2
3	HWB0249	Bolt - 3/8"-16 x 3-3/4" Security Torx With Patch	4
4	HWWR0083	SS Lock Washer for 3/8" Bolts	4
5	96659A108	0.406" ID 0.812" OD 18-8 SS SAE Washer	4
6	HWN0128	3/8" -16 Barrel Nut Torx Pin 302 Stainless	4

Step 1: Determine the installation location. A 36" perimeter around the instrument is recommended for wheelchair accessibility. Excavate two 10" diameter holes, 36" deep, spaced 24-1/4" apart measured center-to-center at the installation location.

Step2: With two people, lower the instrument posts into the excavated holes. Verify the instrument is oriented correctly and level.

Step 3: Pour concrete around each post. If necessary, brace the instrument to hold it in place while the concrete cures. Let the concrete set according to the concrete manufacturer's guidelines. Approximately (6) 80lb. bags will be needed.

For installations targeting compliance with ASTM F1487: Note that the finished mallet attachment height must not exceed 27" above the underlying surfacing in order to maintain ASTM compliance.

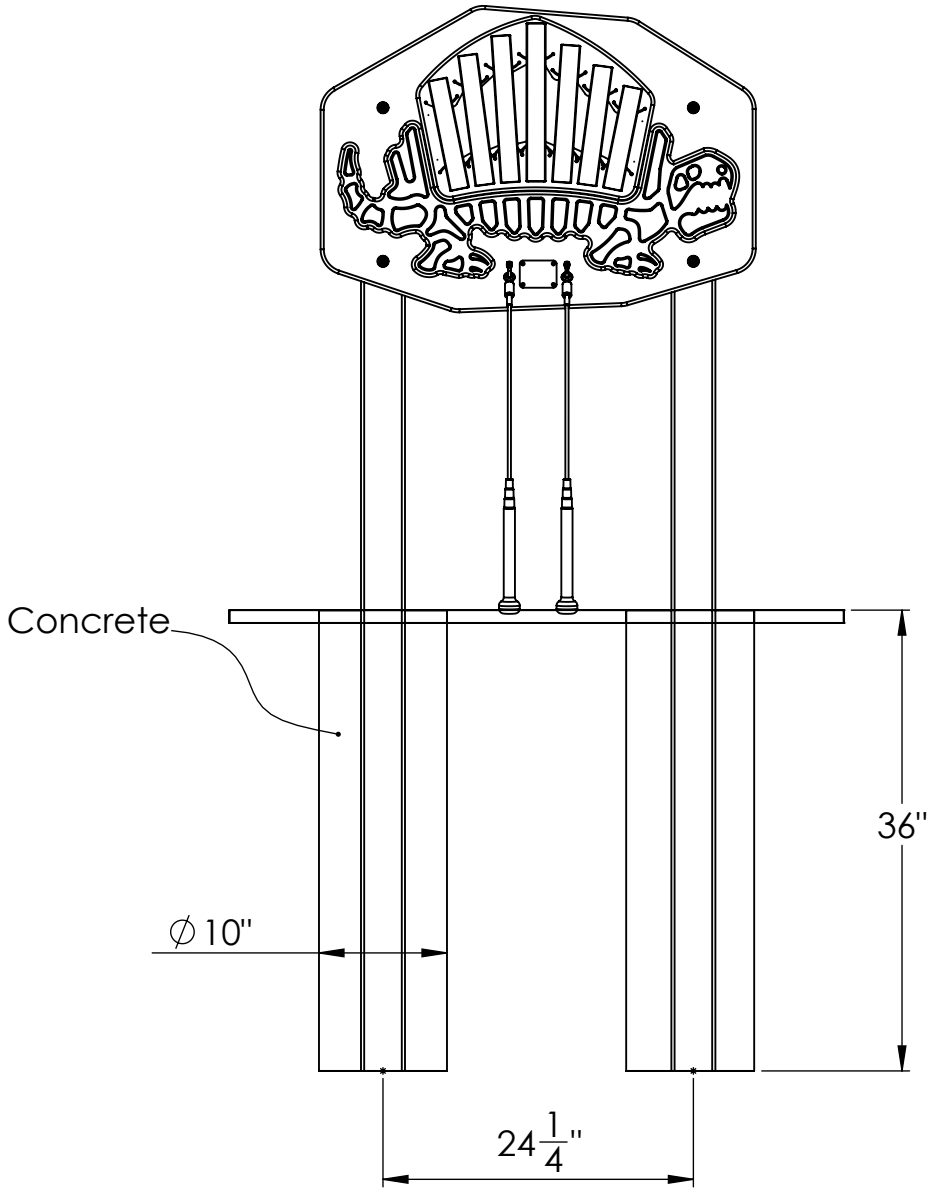

Step 1: Determine the desired installation location. A 36" perimeter around the instrument is recommended for wheelchair accessibility. A concrete pad measuring a minimum of 48" x 24" x 6" thick is required. If a new pad is being poured, approximately (8) 80lb. bags will be needed. Allow concrete to cure per manufacturer's guidelines before continuing installation.

For installations targeting compliance with ASTM F1487: Note that mounting hardware must be covered by surfacing and finished mallet attachment height must not exceed 27" in order to maintain ASTM compliance.

Step 2: With two people, place the Instrument Assembly onto the concrete pad at the desired location and mark the center of each hole in both surface mount bases. After marks have been made, set the instrument aside. Using a rotary or hammer drill with a 3/8" masonry bit, drill into the concrete at the marked locations to a depth of at least 4".

Step 3: Align the instrument over the drilled holes. Insert the provided anchor bolts and position the anchor nut so that it is flush with the top of the bolt. Pound the anchor bolts into the hole until the anchor washer is flush with the surface mount base. Tighten the nuts on the anchor bolts using a 9/16" socket wrench until snug. Cover the protruding bolt heads with the provided nut caps.

If using wet set anchors, follow the manufacturer's guidelines for installation, ensuring at least 2" of thread is left exposed above the finished grade of the concrete.

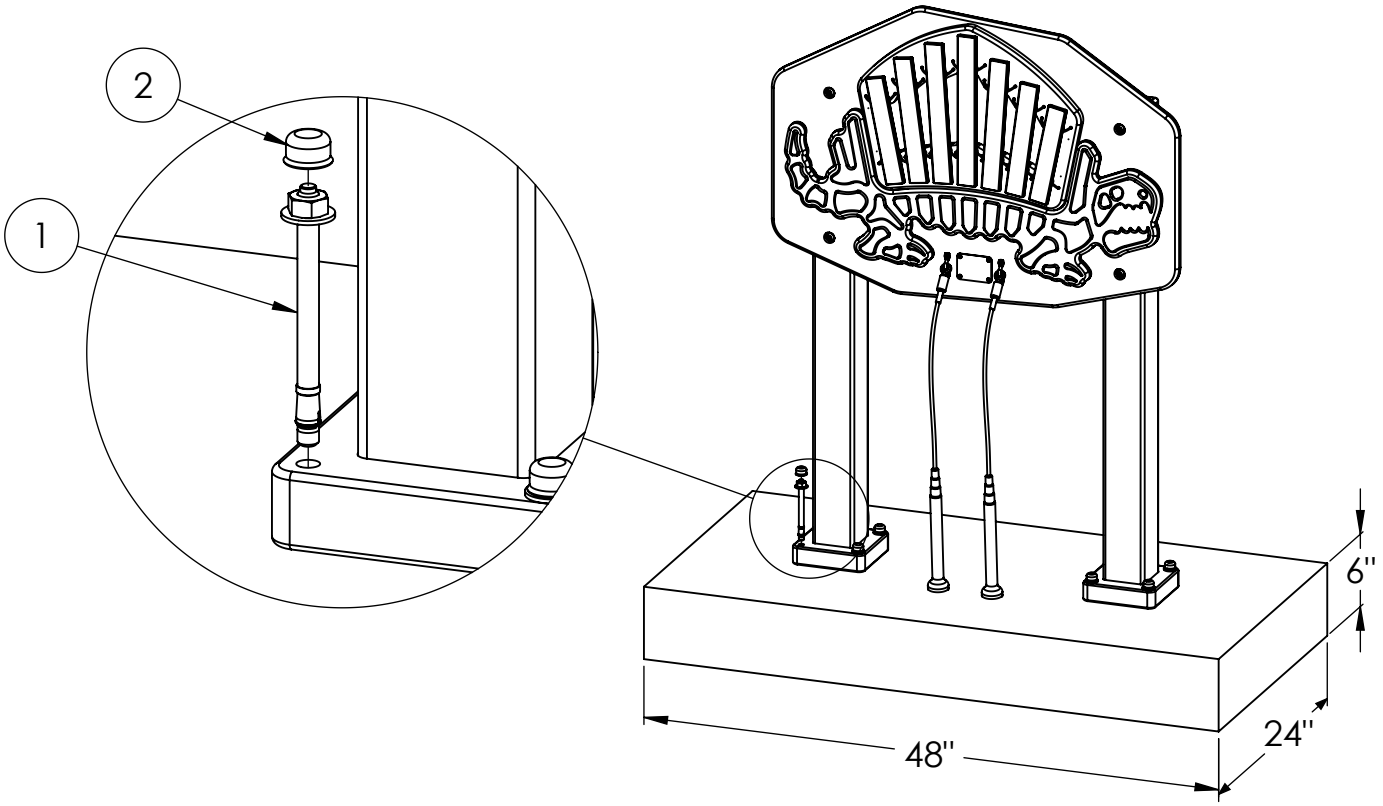

ITEM NO.	PART NUMBER	DESCRIPTION	QTY.
1	POW 07316	3/8"-16 Wedge Expansion Anchor, 5"lg. SS	8
2	9267K43	35/64" Hex Nut Cap	8

Step 1: With two people, place the Instrument Assembly onto the Portable Stand, aligning the holes.

Step 2: While one person hold the instrument in place, secure the instrument to the Portable Stand with the provided Thumb Screws, tightening until snug. The Portable Stand comes with threaded inserts pre-installed.

Thumb Screws may loosen over time with continued play and should be checked periodically and tightened as necessary.

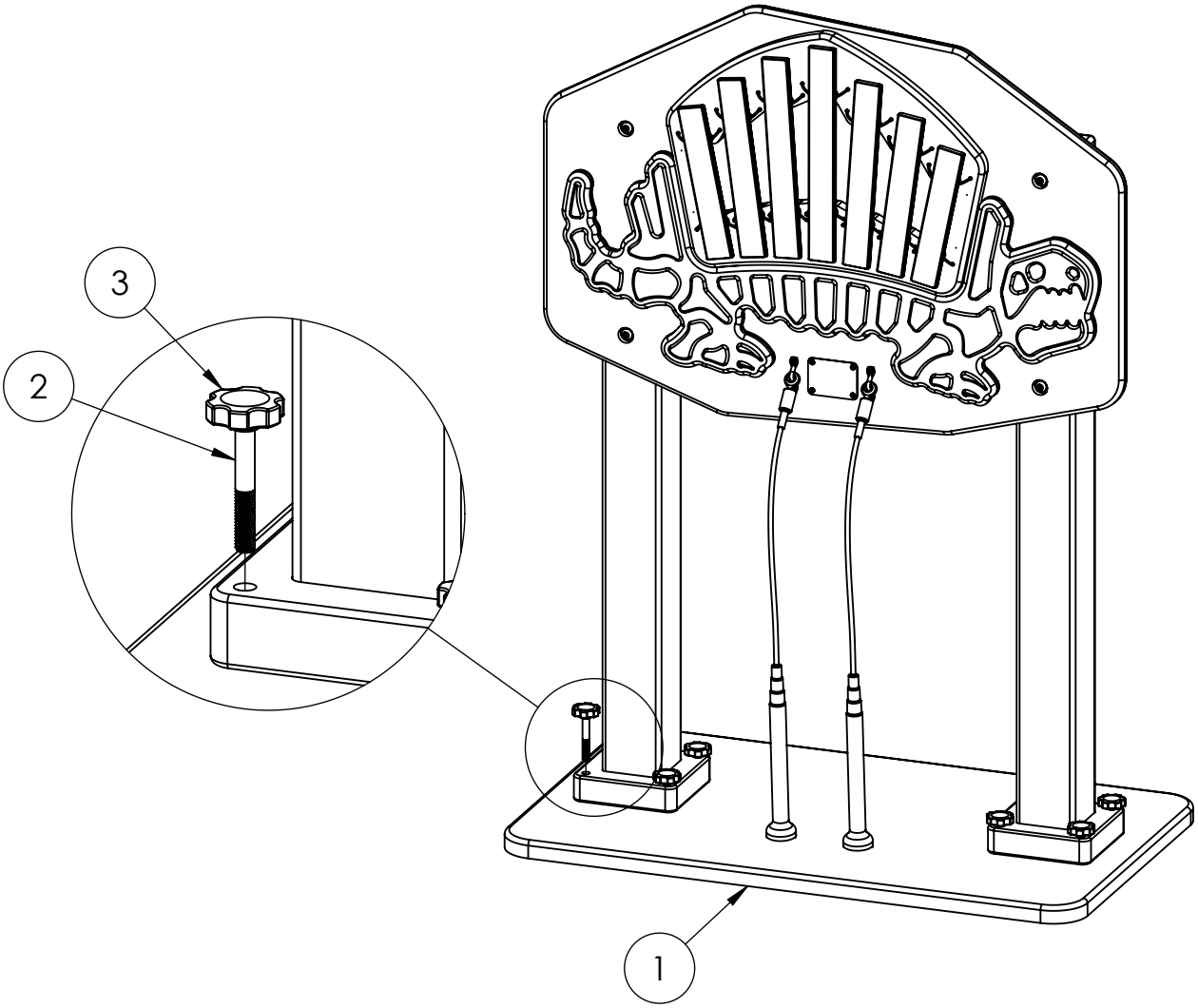

ITEM NO.	PART NUMBER	DESCRIPTION	QTY.
1	FOSS-PM-PS-24	Fossil Portable Stand - 24" ctr-ctr	1
2	92185A634	3/8"-16 Socket Head Screw, 2.5"lg. SS	8
3	94052A046	3/8" Socket Head Knob	8