PART INVENTORY:

- Harmony Method Device Holder Assembly
- (4x) 1/4"-20 x 1/2" lg Button Head Screw
- Loctite Blue

TOOLS REQUIRED:

- T27 Security Hand Key (Included)

This installation guide applies to the following instruments:

- **Duet**
- **Yantzee**

Instrument referenced in diagrams may differ, however installation is identical.

STEP 1: Remove Existing Placard

Using the provided Hand Key, remove the (4) screws and the Freenotes Placard at the top of the instrument.

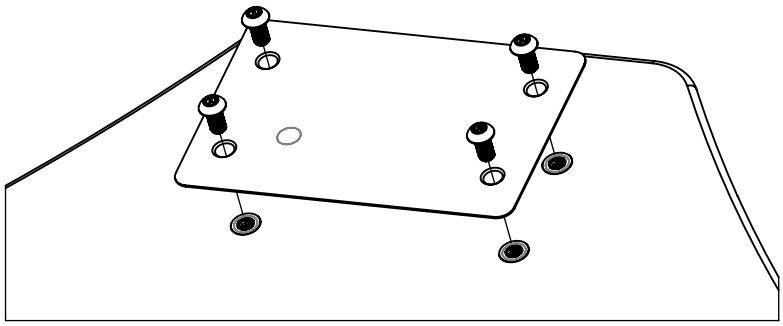

STEP 2: Install Device Holder Assembly
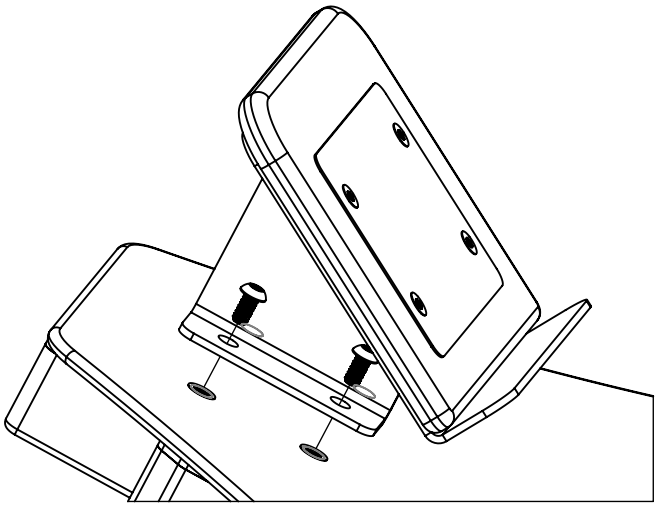
Align the holes in the base of the Device Holder Assembly to the vacated holes in the instrument. With a drop of Loctite applied to each screw, fasten the device holder assembly to the instrument using the same screws and hand key. An extra set of screws is provided.